WRBT 1000 K-M3-K
Plastic fiber optic

- Coaxial fibre configuration
- Highly precise detection
- Focusing optics VOM-M3 for smallest light spot
- Cannot be shortened

Safety instructions

The Instruments are not to be used for safety applications, in particular applications in which safety of persons depends on proper operation of the instruments.
These instruments shall exclusively be used by qualified personnel.

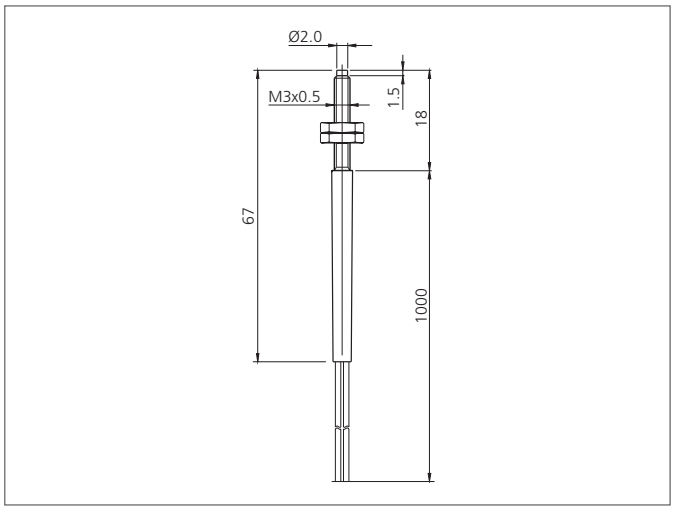

TECHNICAL INFORMATION (typ.)	
Opening angle	56°
Light outlet	axial
single fibre	Ø 0,5 mm
Bending radius	> 15 mm
Temperature resistance	-55 ... + 70 °C
Protection class	IP 67
For	Amplifier for plastic fiber optics
Material	stainless steel (Thread sleeve) polymethyl methacrylate (Fibre) PE (Cladding)